WEBTROL

There when you need us most

NV SERIES VERTICAL BOOSTER PUMPS

304/316 Stainless Steel Booster Pumps

NV Series

Space saving NV Series pumps provide you with reliable solutions for a variety of industrial, commercial, and agricultural applications.

The quality and performance you expect, along with industry best lead times and personalized service, only from Webtrol!

Features and Benefits

- In-line, space saving design, with suction and discharge on the same plane
- Maintenance-free cartridge type mechanical seals
- All wetted parts constructed of 304 or 316 stainless steel
- Drop-in replacement for existing installations
- Standard TEFC motor enclosure
- Meets NSF/ANSI 61 and 372 standards

C US
Drinking Water
NSF/ANSI 372

Performance

HP Range: .5 - 60 HP, 60Hz.

Capacities to 600 GPM

Pressures to 380 PSI

Temperatures to 248 °F

Typical Services

- Water Supply
- Reverse Osmosis
- Water Boosting
- Washing Systems
- Jockey Pump
- Water Treatment
- Filtration
- Plants
- Boiler Feed
- Hot & Cold Water
- Circulation
- Irrigation
- Sprinkler Systems
- Heat Exchangers

WEBTROL

There when you need us most

NV Series

BOOSTER PUMPS

Construction & Design Features

Series	Stages	Max. Working Pressure	Stages	Max. Inlet Pressure
NV6	2 - 27	362	2 - 26	150
		362	27	220
NV12	2 - 25	362	2 - 15	150
			17 - 25	220
NV25	2 - 24	362	2 - 9	150
			10 - 24	220
NV45	1 - 10	232	1 - 5	118
	12 - 17	362	6 - 18	150
NV65	1 - 8	232	1 - 2	118
	9 - 12	362	3 - 12	150
NV85	1 - 7	232	1	118
	8 - 10	362	2 - 10	150
NV120	1 - 5	232	1 - 2	59
	6 - 10	465	3 - 6	150
			7 - 10	220
NV180	1 - 4	232	1	59
	5 - 7	465	2 - 3	150
			4 - 7	220
NV280	1 - 3	232	(1 - 1)	59
	4 - 5	465	1 - (2 - 1)	150
			2 - 5	220
NV400	1 - 3	232	1 - (2 - 2)	150
	4	465	(2 - 1) - 4	220

MODEL NO.: NV25B9FE3T

Series/Nominal Rated Flow (GPM)

Construction
B = 304SS S = 316SS

Number of Stages

Connection
F = Flanged V = Victaulic

Elastometers
E = EPDM V = Viton

Phase / Hz (PH)
1 = 1PH / 60Hz 3 = 3PH / 60Hz

Motor Enclosure
D = ODP T = TEFC

Component	304 SS Models		316 SS Models	
	NV6B thru NV85B	NV120B thru NV400B	NV6S thru NV85S	NV120S thru NV400S
Motor Bracket	Cast Iron	Cast Iron	Cast Iron	Cast Iron
Pump Head	304 SS	304 SS	316 SS	316 SS
Impeller	304 SS	304 SS	316 SS	316 SS
Diffuser	304 SS	304 SS	316 SS	316 SS
Neck Ring	Teflon	Carbon Reinforced Teflon	Teflon	Carbon Reinforced Teflon
Shaft	431 SS	431 SS	316 SS	316 SS
Casing	304 SS	304 SS	316 SS	316 SS
O-Ring	EPDM	EPDM	EPDM	EPDM
Pump Base	304 SS	304 SS	316 SS	316 SS
Base Plate	Cast Iron	Cast Iron	Cast Iron	Cast Iron
Mech Seal	Silicon Carbide/Silicon Carbide/EPDM			

SERIES FAMILY CURVES

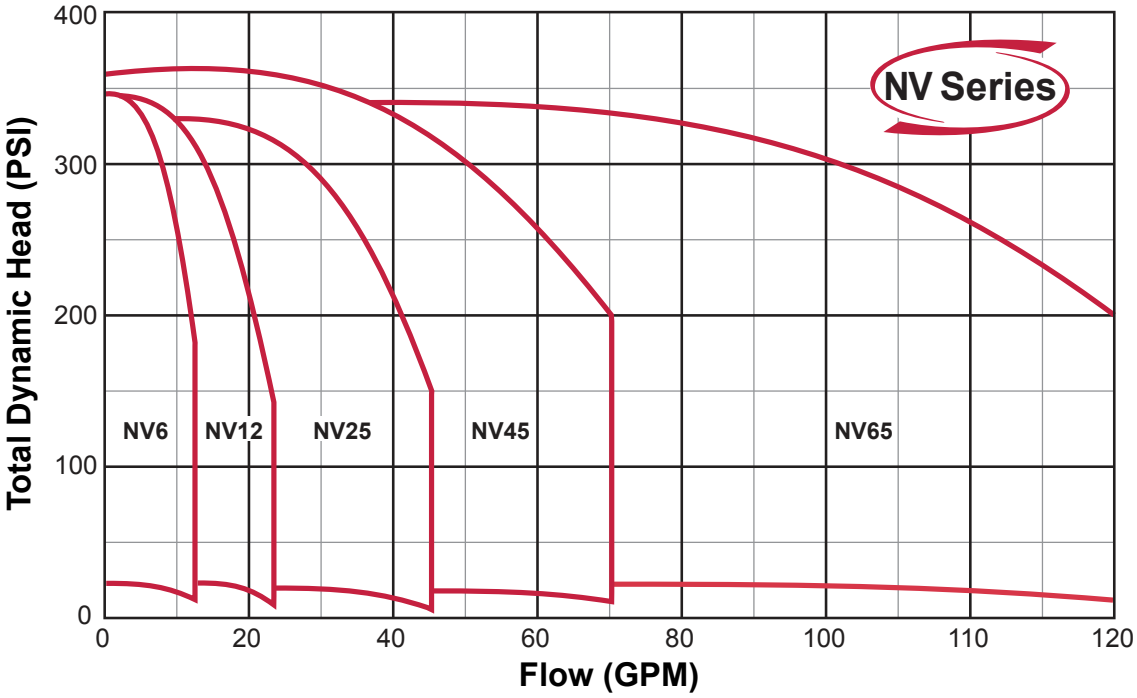

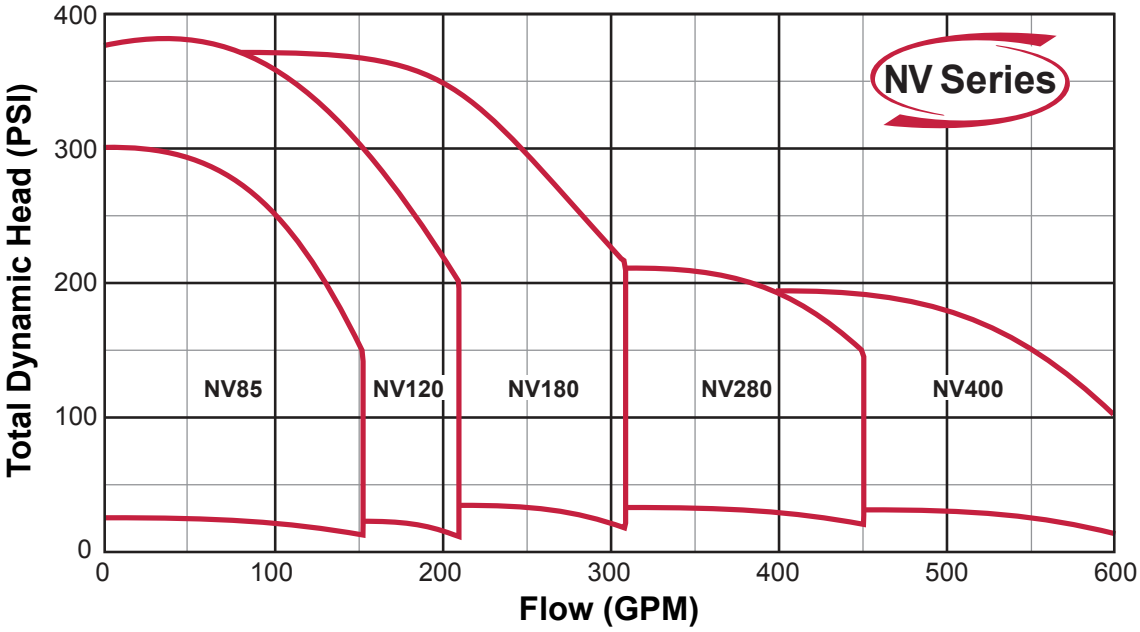

Note:
NV Series curves in this catalog are based on 60 Hz 3450 rpm motors. 50 Hz 2875 rpm curves are available. These curves are for general guidance only, individual pump curves are available upon request. A certified curve may be requested for an additional cost. Webtrol will build pumps to fit your specific needs, contact factory for pricing.

NV Series

NV6 PUMP DIMENSIONS

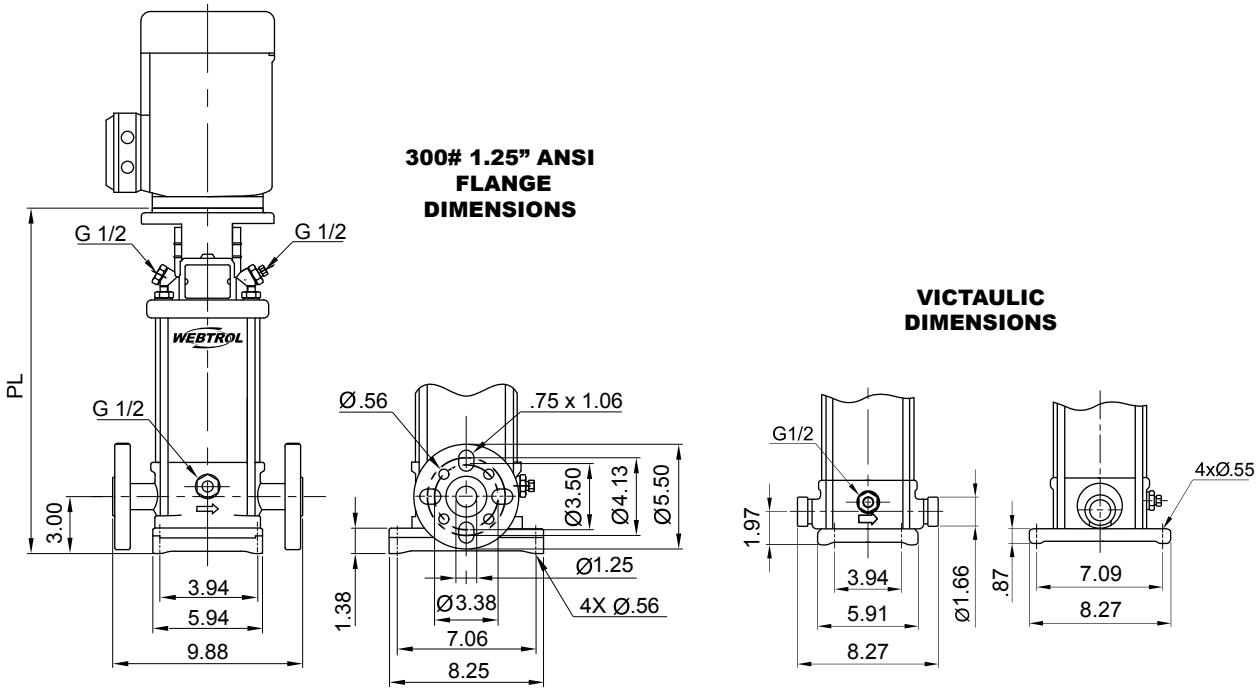

NOTES: All dimensions are in inches unless otherwise noted. Please contact factory for specific motor manufacturer dimensions

Model	HP	Motor Frame	Pump Length (PL) - in. Flange	Pump Length (PL) - in. Victaulic	Pump End Weight - lbs. Flange	Pump End Weight - lbs. Victaulic
NV6B2	.5	56C	12.05	11.06	33	31
NV6B3	.5	56C	12.05	11.06	34	32
NV6B4	.5	56C	12.76	11.77	34	32
NV6B5	.5	56C	13.46	12.48	35	33
NV6B6	.75	56C	14.17	13.19	36	34
NV6B7	.75	56C	14.84	13.86	37	35
NV6B8	1	56C	15.55	14.57	37	35
NV6B9	1	56C	16.26	15.28	38	36
NV6B10	1	56C	16.97	15.98	39	37
NV6B11	1.5	56C	17.68	16.69	40	38
NV6B12	1.5	56C	18.39	17.40	41	39
NV6B13	1.5	56C	19.09	18.11	42	39
NV6B15	2	56C	20.55	19.57	44	42
NV6B17	2	56C	21.97	20.98	45	43
NV6B19	2	56C	23.39	23.33	52	50
NV6B21	3	182TC	25.73	24.74	54	52
NV6B23	3	182TC	27.15	26.16	55	53
NV6B25	3	182TC	28.56	27.58	57	55
NV6B27	3	182TC	29.98	29.00	58	56

NV6 SERIES GROUP CURVES

NV Series

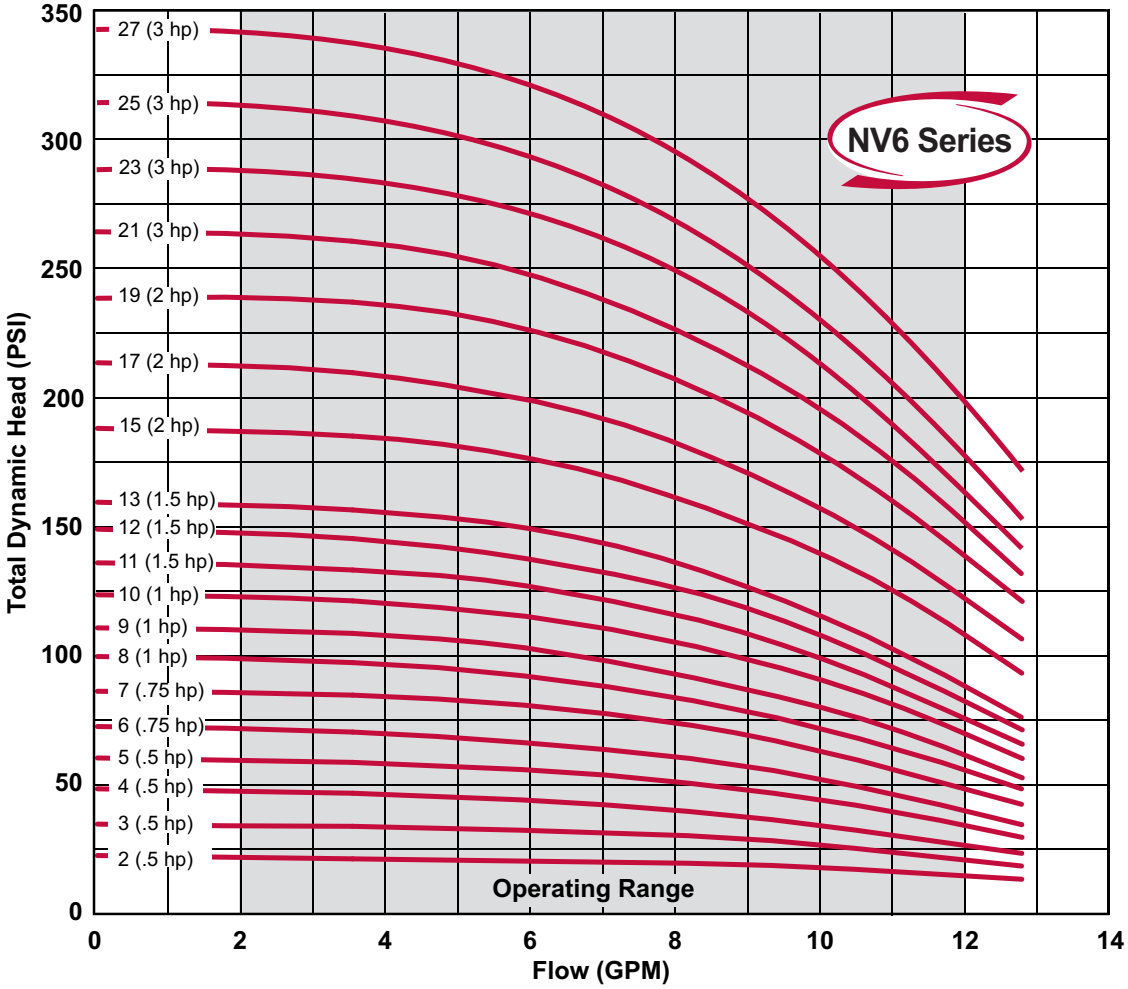

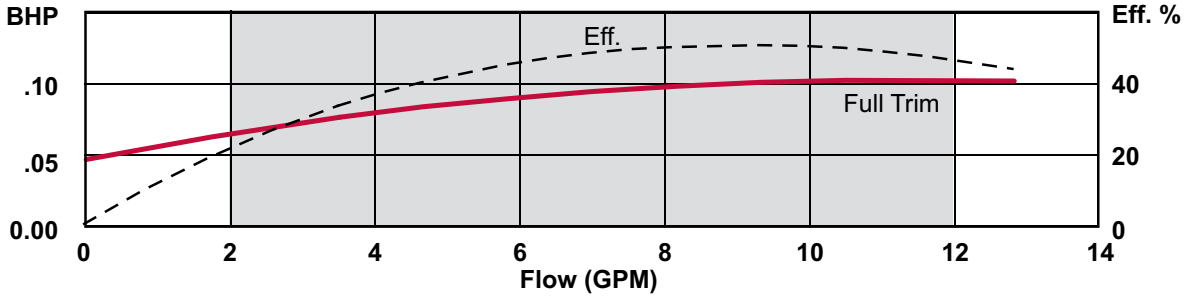

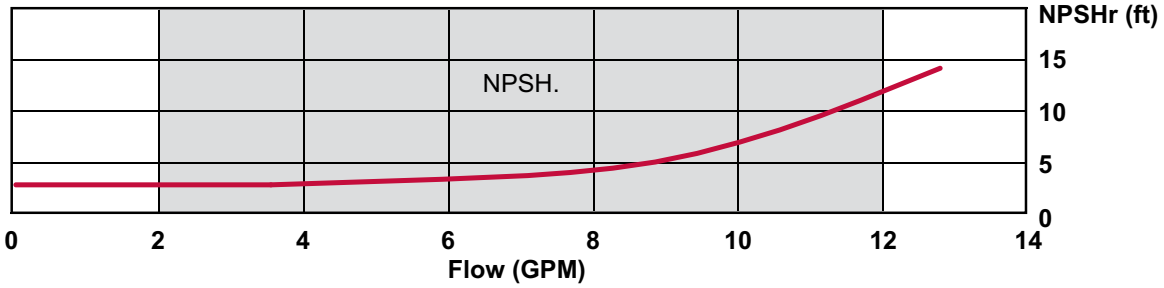

NV Series

NV12 PUMP DIMENSIONS

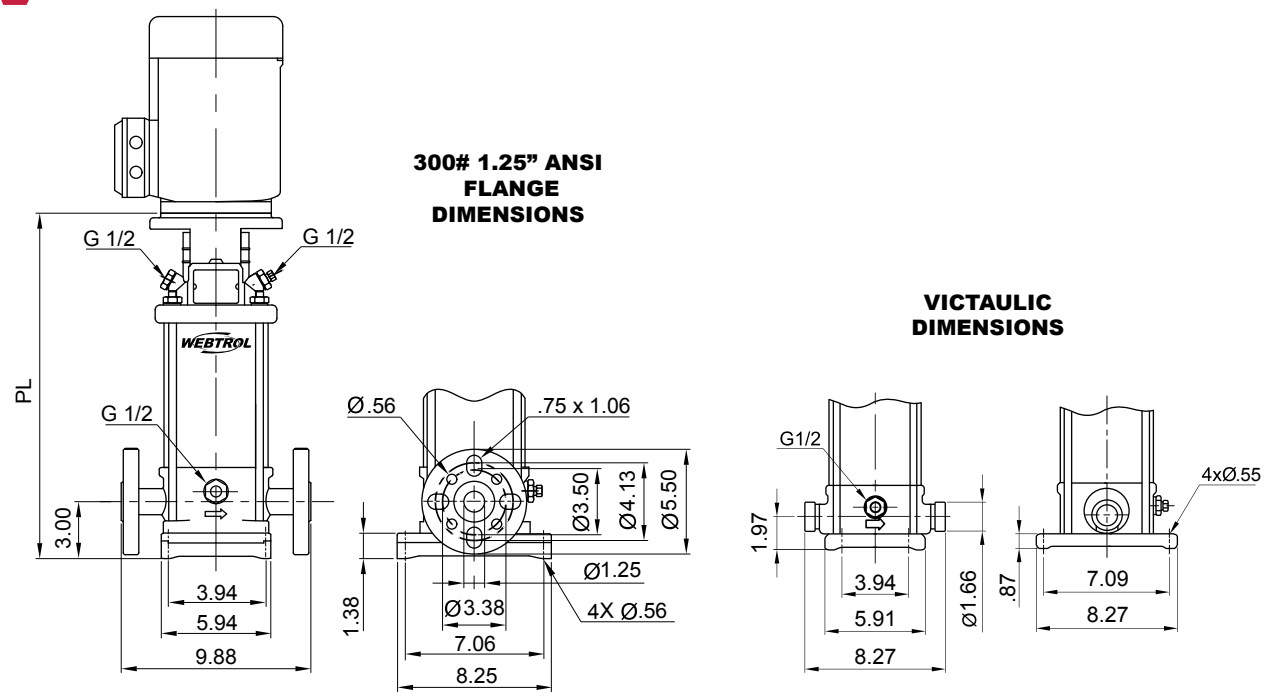

NOTES: All dimensions are in inches unless otherwise noted. Please contact factory for specific motor manufacturer dimensions.

Model	HP	Motor Frame	Pump Length (PL) - in. Flange	Pump Length (PL) - in. Victaulic	Pump End Weight - lbs. Flange	Pump End Weight - lbs. Victaulic
NV12B2	.5	56C	12.05	11.06	33	31
NV12B3	.5	56C	12.05	11.06	34	32
NV12B4	.75	56C	12.76	11.77	34	32
NV12B5	.75	56C	13.43	12.44	35	33
NV12B6	1	56C	14.13	13.15	36	34
NV12B7	1.5	56C	14.84	13.86	37	35
NV12B8	1.5	56C	15.55	14.57	37	35
NV12B9	1.5	56C	16.30	15.31	38	36
NV12B10	2	56C	17.01	16.02	40	38
NV12B11	2	56C	17.72	16.73	41	39
NV12B12	2	56C	18.43	17.44	42	39
NV12B13	3	182TC	20.06	19.07	47	45
NV12B15	3	182TC	21.48	20.49	49	47
NV12B17	3	182TC	22.89	21.91	51	49
NV12B19	3	182TC	24.50	23.33	52	50
NV12B21	5	182TC	25.73	24.74	54	52
NV12B23	5	182TC	27.15	26.16	55	53
NV12B25	5	182TC	28.56	27.58	57	55

NV12 SERIES GROUP CURVES

NV Series

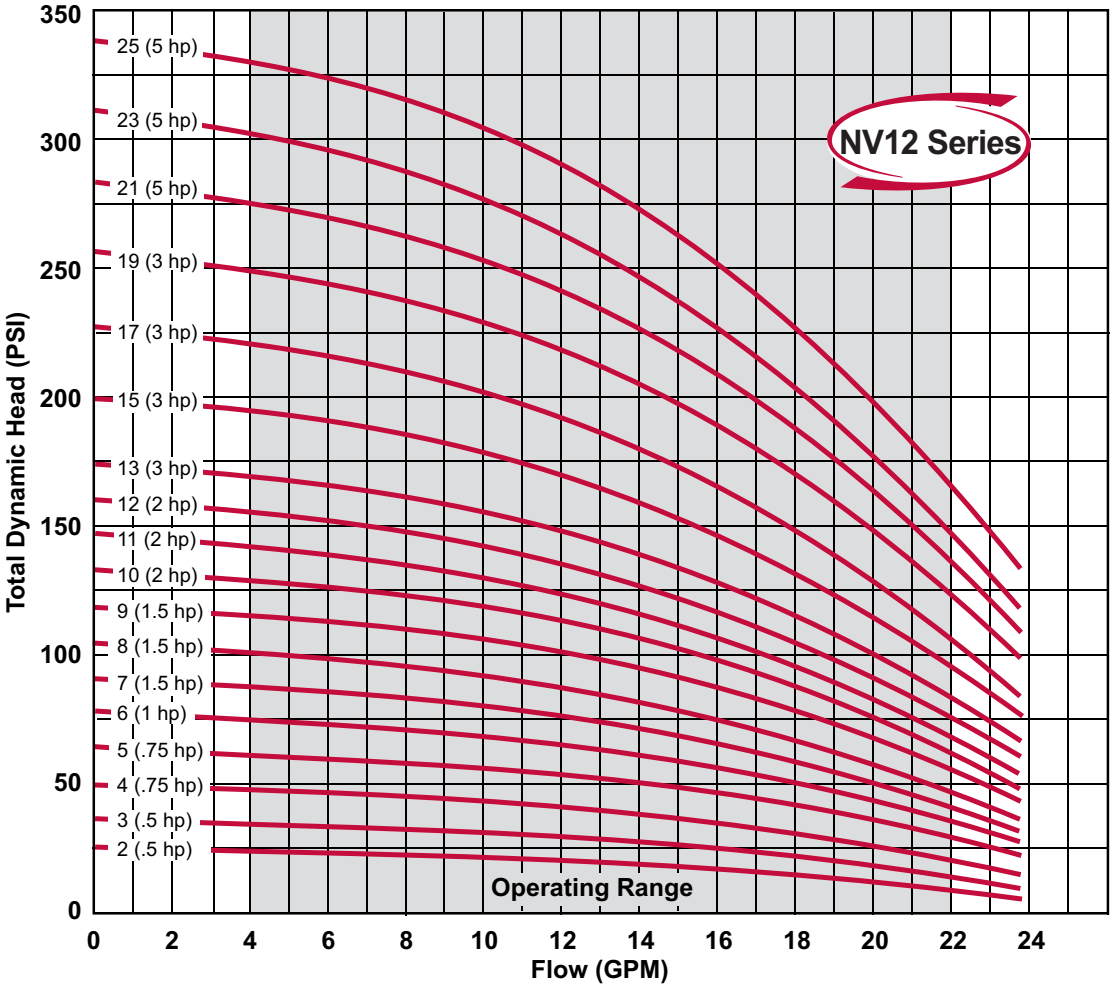

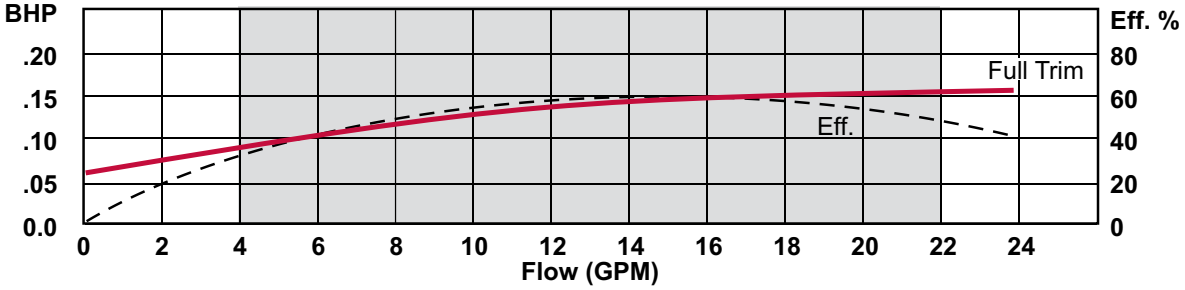

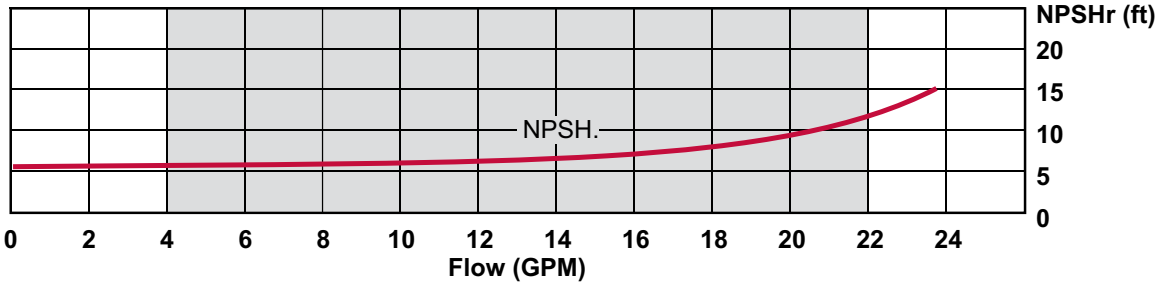

NV Series

NV25 PUMP DIMENSIONS

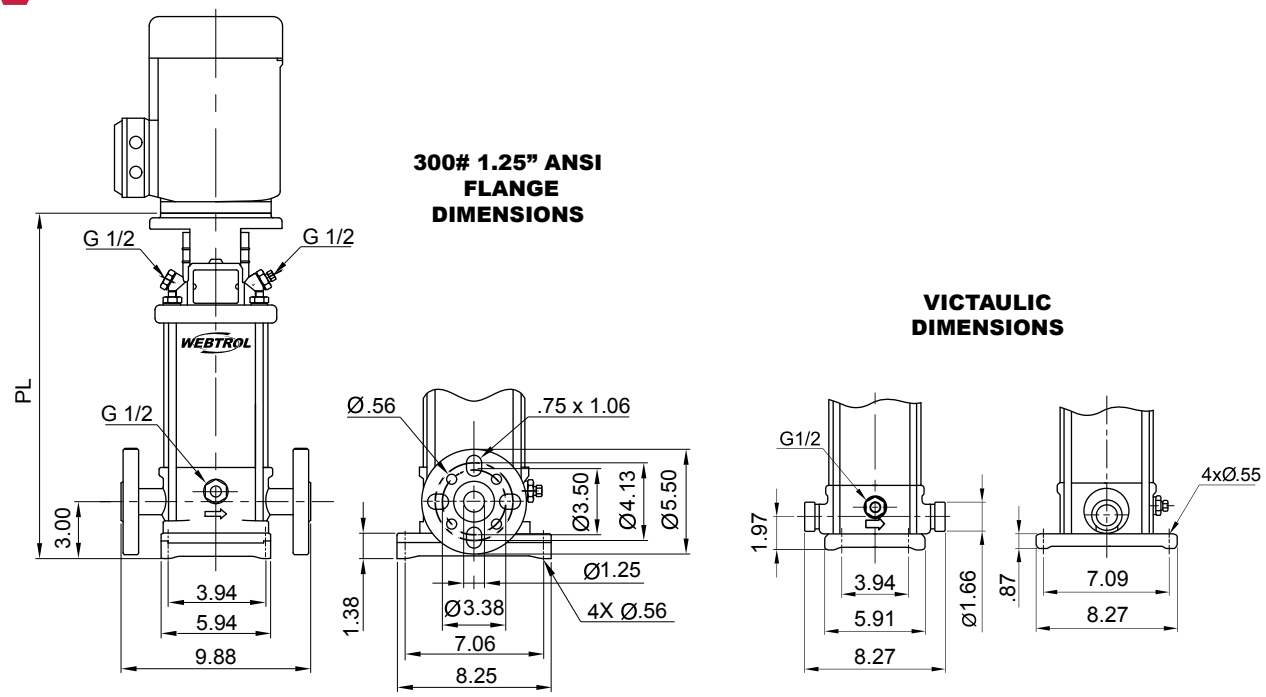

NOTES: All dimensions are in inches unless otherwise noted. Please contact factory for specific motor manufacturer dimensions

Model	HP	Motor Frame	Pump Length (PL) - in. Flange	Pump Length (PL) -in. Victaulic	Pump End Weight - lbs. Flange	Pump End Weight - lbs. Victaulic
NV25B2	.75	56C	11.93	11.06	33	31
NV25B3	1	56C	13.10	12.09	35	33
NV25B4	1.5	56C	14.06	13.15	36	34
NV25B5	1.5	56C	15.12	14.25	38	36
NV25B6	2	56C	16.28	15.31	39	37
NV25B7	2	56C	17.40	17.30	45	43
NV25B8	3	182TC	19.35	18.37	46	44
NV25B9	3	182TC	20.31	19.43	47	45
NV25B10	3	182TC	21.44	20.50	49	46
NV25B11	5	182TC	22.50	21.56	50	48
NV25B12	5	182TC	23.56	22.62	51	49
NV25B13	5	182TC	24.63	23.68	52	50
NV25B14	5	182TC	25.69	24.74	53	51
NV25B15	5	182TC	26.75	25.81	54	52
NV25B16	5	182TC	27.82	26.88	56	53
NV25B18	7.5	213TC	30.57	29.59	63	61
NV25B20	7.5	213TC	32.70	31.71	66	64
NV25B22	7.5	213TC	34.72	33.84	68	66
NV25B24	7.5	213TC	36.85	35.96	70	68

NV25 SERIES GROUP CURVES

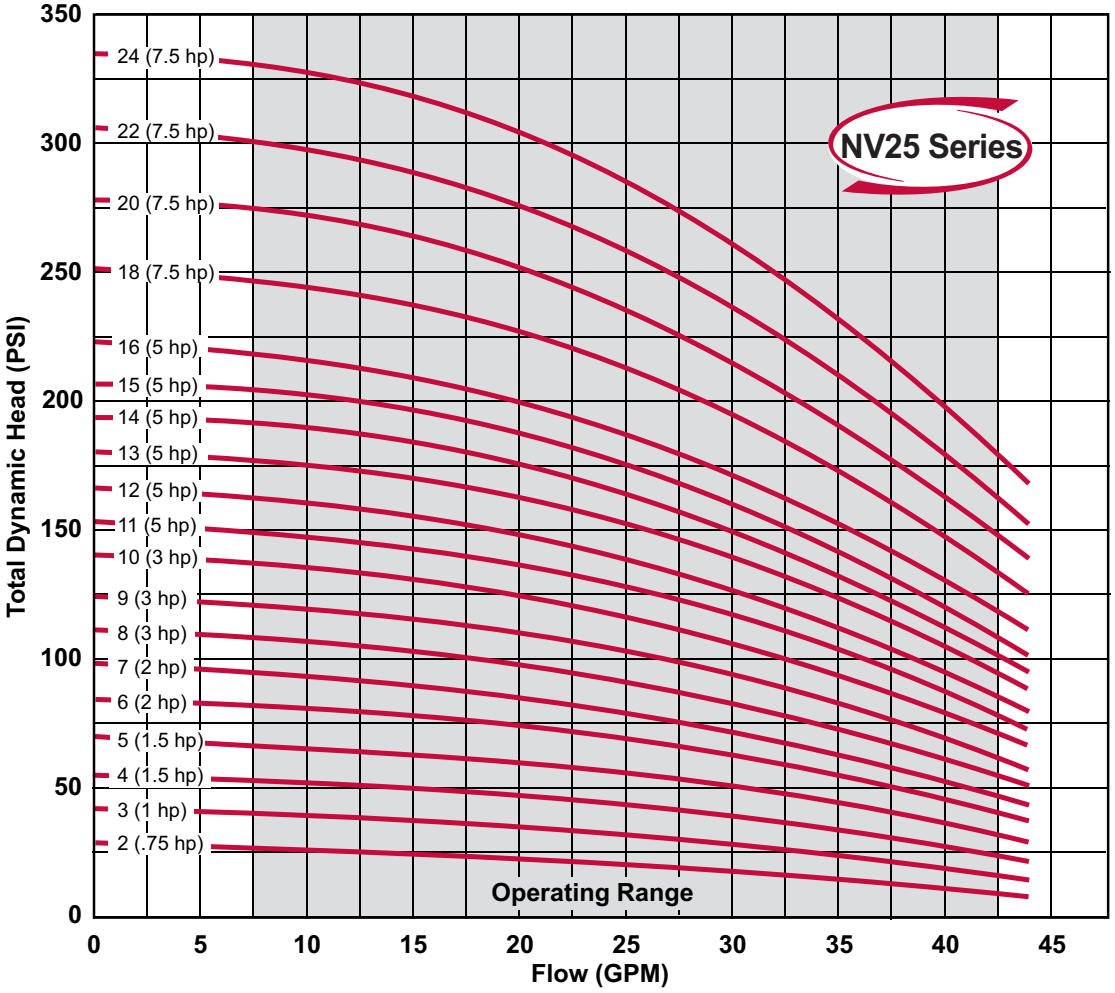

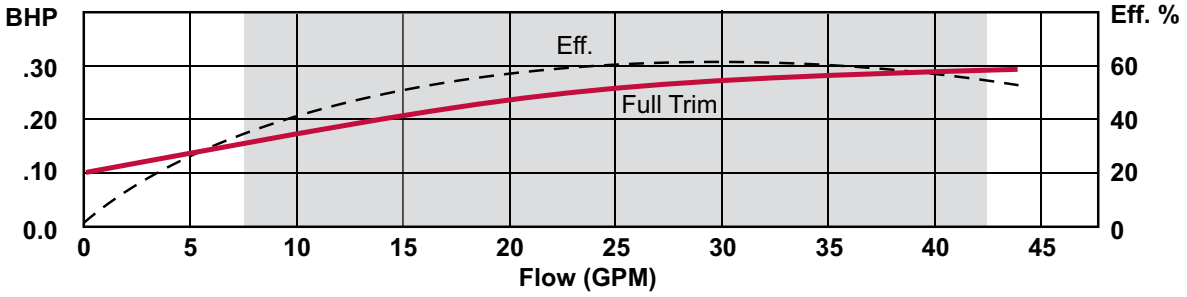

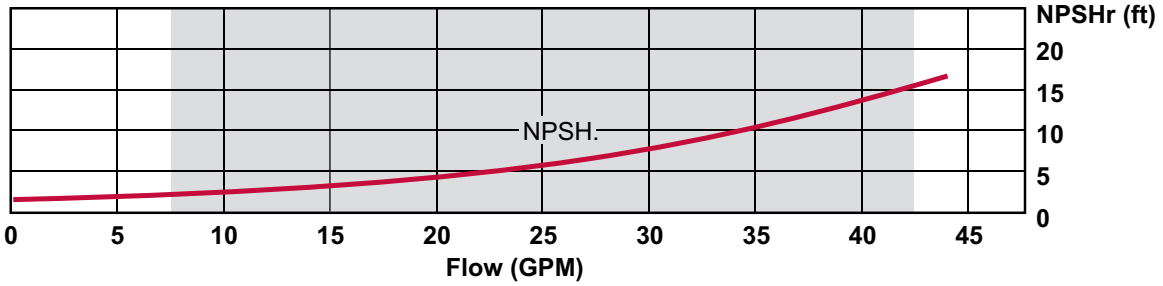

NV Series

NV45 PUMP DIMENSIONS

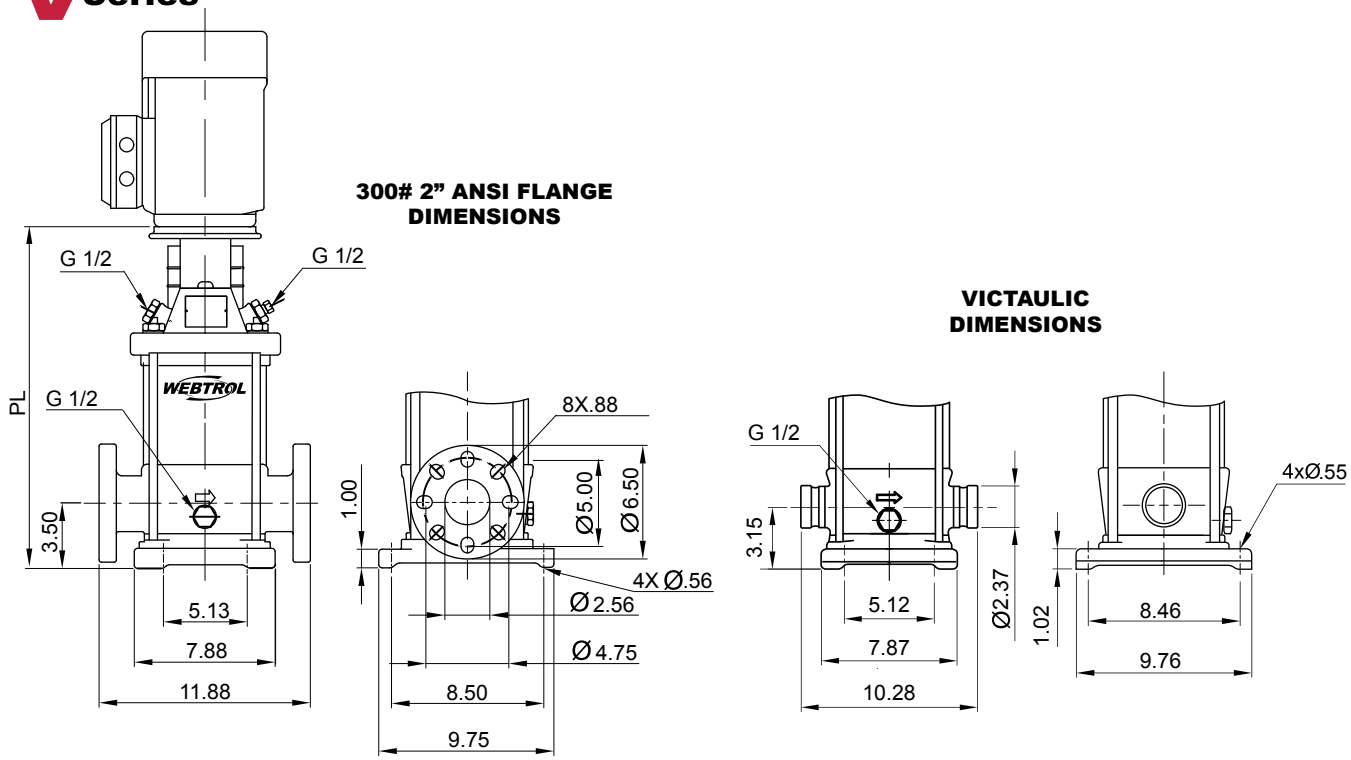

NOTES: All dimensions are in inches unless otherwise noted. Please contact factory for specific motor manufacturer dimensions.

Model	HP	Motor Frame	Pump Length (PL) - in. Flange	Pump Length (PL) - in. Victaulic	Pump End Weight - lbs. Flange	Pump End Weight - lbs. Victaulic
NV45B1	1	56C	14.96	14.53	60	58
NV45B2	1.5	56C	14.96	14.53	60	59
NV45B3	3	182TC	17.15	16.71	84	83
NV45B4	3	182TC	18.35	17.91	87	85
NV45B5	5	182TC	19.53	19.09	89	87
NV45B6	5	182TC	20.71	20.28	91	89
NV45B7	5	182TC	21.25	22.00	97	96
NV45B8	7.5	213TC	23.62	23.19	99	98
NV45B9	7.5	213TC	24.80	24.37	101	100
NV45B10	7.5	213TC	25.98	25.55	104	102
NV45B12	10	213TC	28.34	27.91	108	107
NV45B14	10	213TC	30.01	32.90	126	125
NV45B16	15	254TC	35.69	35.26	130	129
NV45B17	15	254TC	36.89	37.62	133	132

NV45 SERIES GROUP CURVES

NV Series

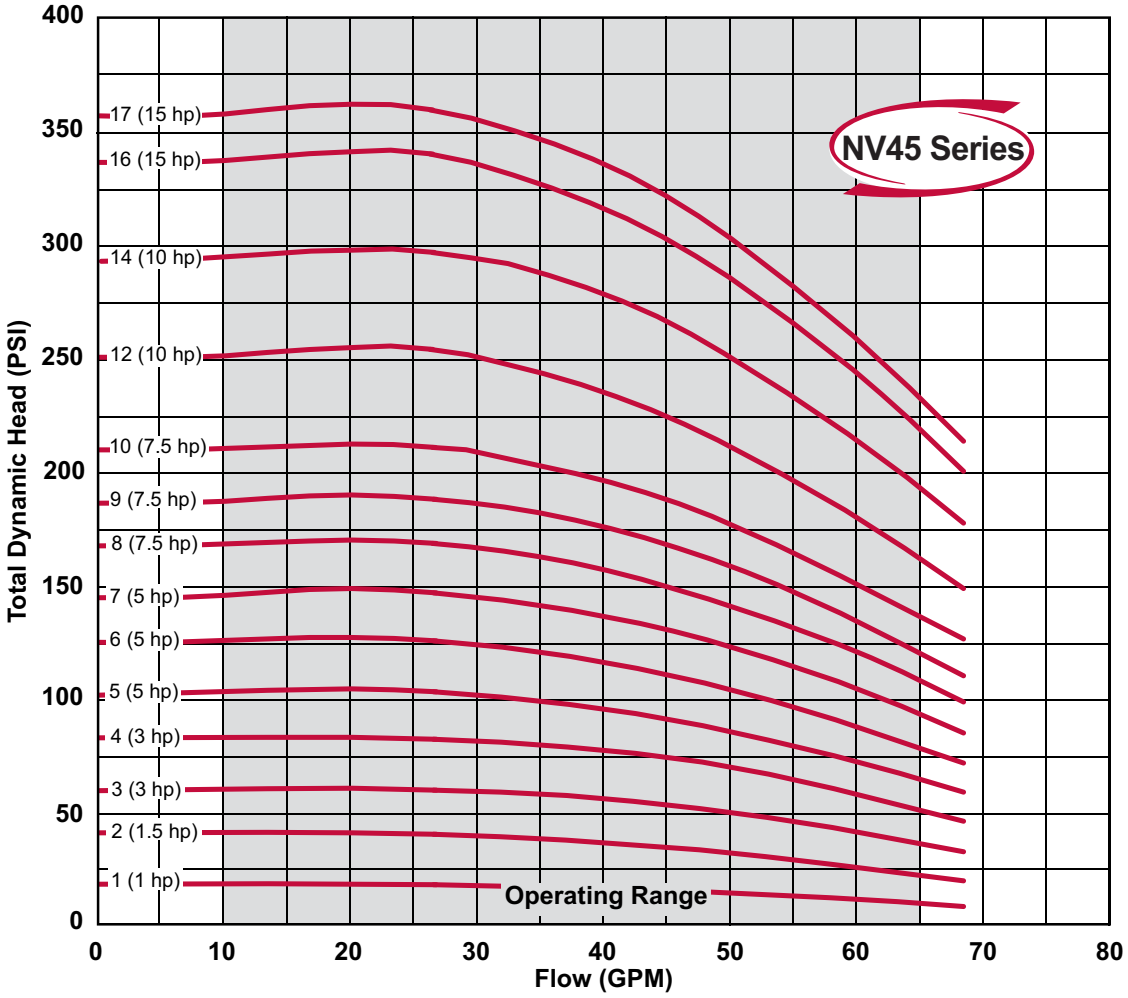

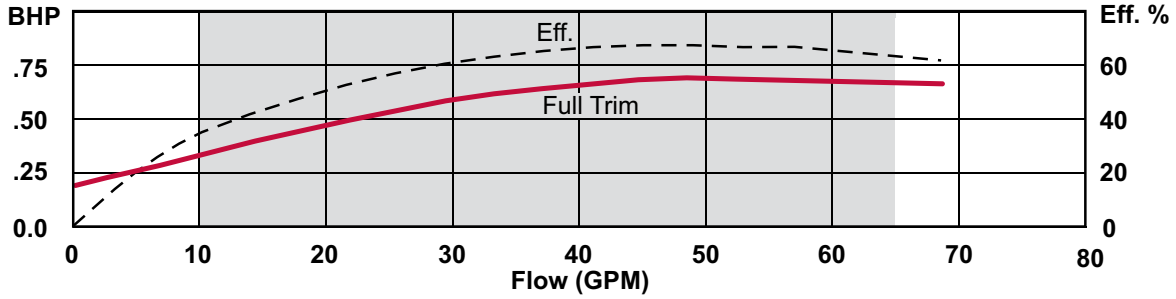

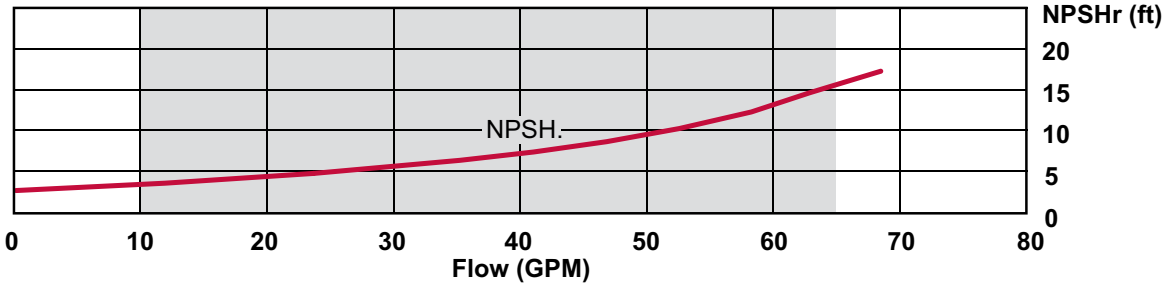

NV Series

NV65 PUMP DIMENSIONS

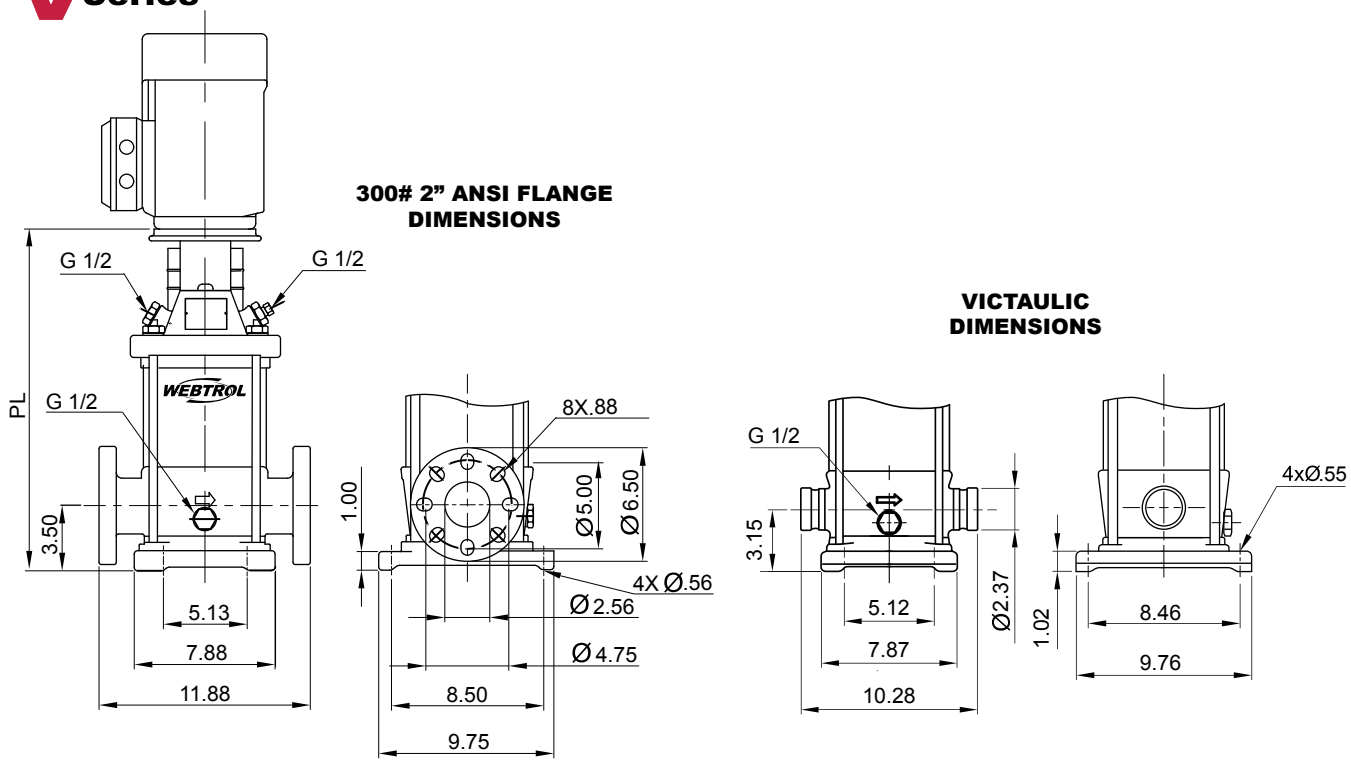

NOTES: All dimensions are in inches unless otherwise noted. Please contact factory for specific motor manufacturer dimensions.

Model	HP	Motor Frame	Pump Length (PL) - in. Flange	Pump Length (PL) - in. Victaulic	Pump End Weight - lbs. Flange	Pump End Weight - lbs. Victaulic
NV65B1	2	56C	16.10	15.71	62	61
NV65B2	5	182TC	17.13	16.73	84	82
NV65B3	5	182TC	18.30	19.09	91	89
NV65B4	7.5	213TC	21.22	20.82	94	92
NV65B5	10	213TC	22.99	22.59	97	96
NV65B6	10	213TC	24.07	26.99	114	112
NV65B7	15	254TC	29.16	28.76	117	115
NV65B8	15	254TC	30.93	30.54	120	118
NV65B9	15	254TC	32.70	32.31	123	121
NV65B10	20	254TC	34.47	34.08	126	125
NV65B12	25	284TSC	37.26	36.87	126	125

NV65 SERIES GROUP CURVES

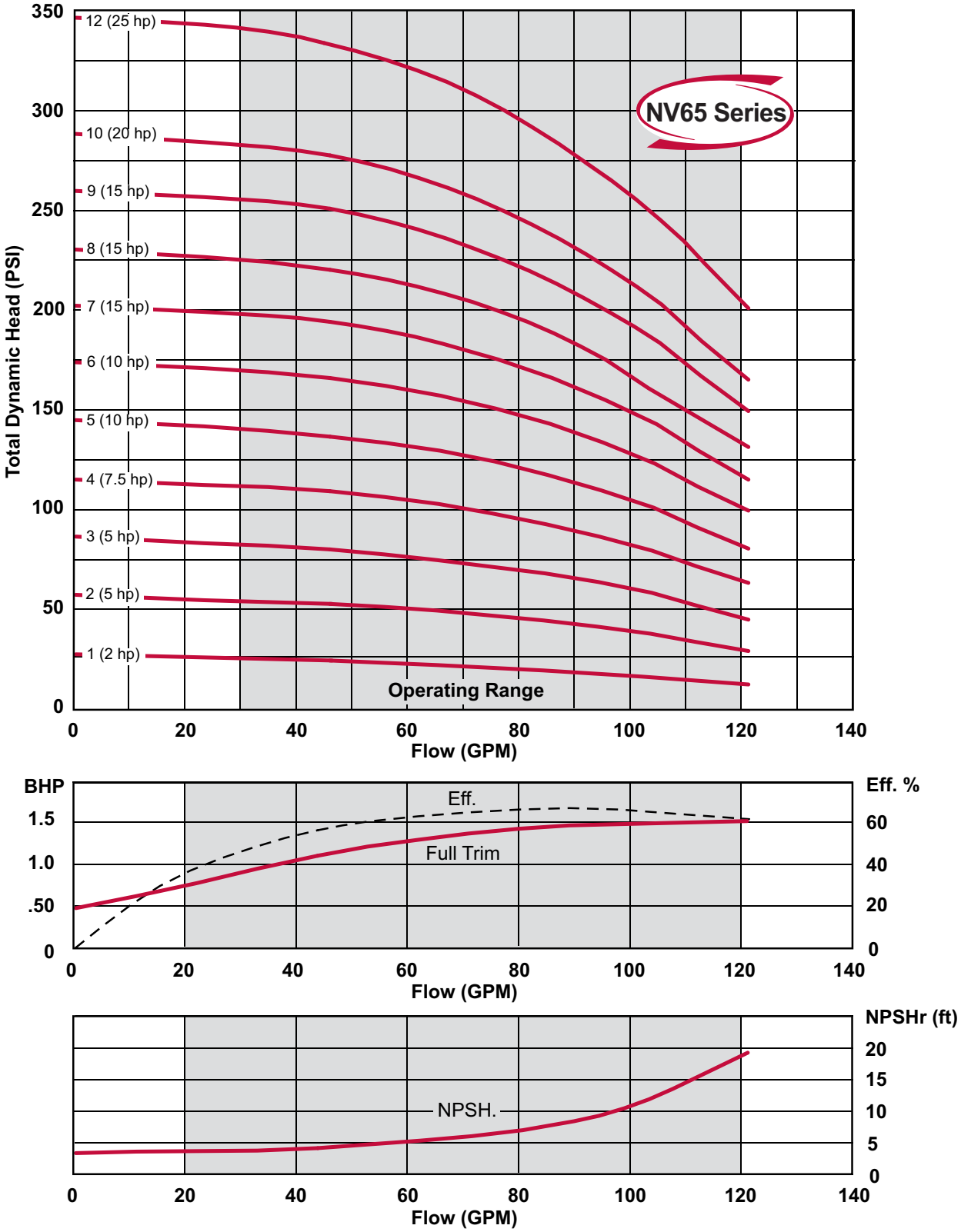

NV85 PUMP DIMENSIONS

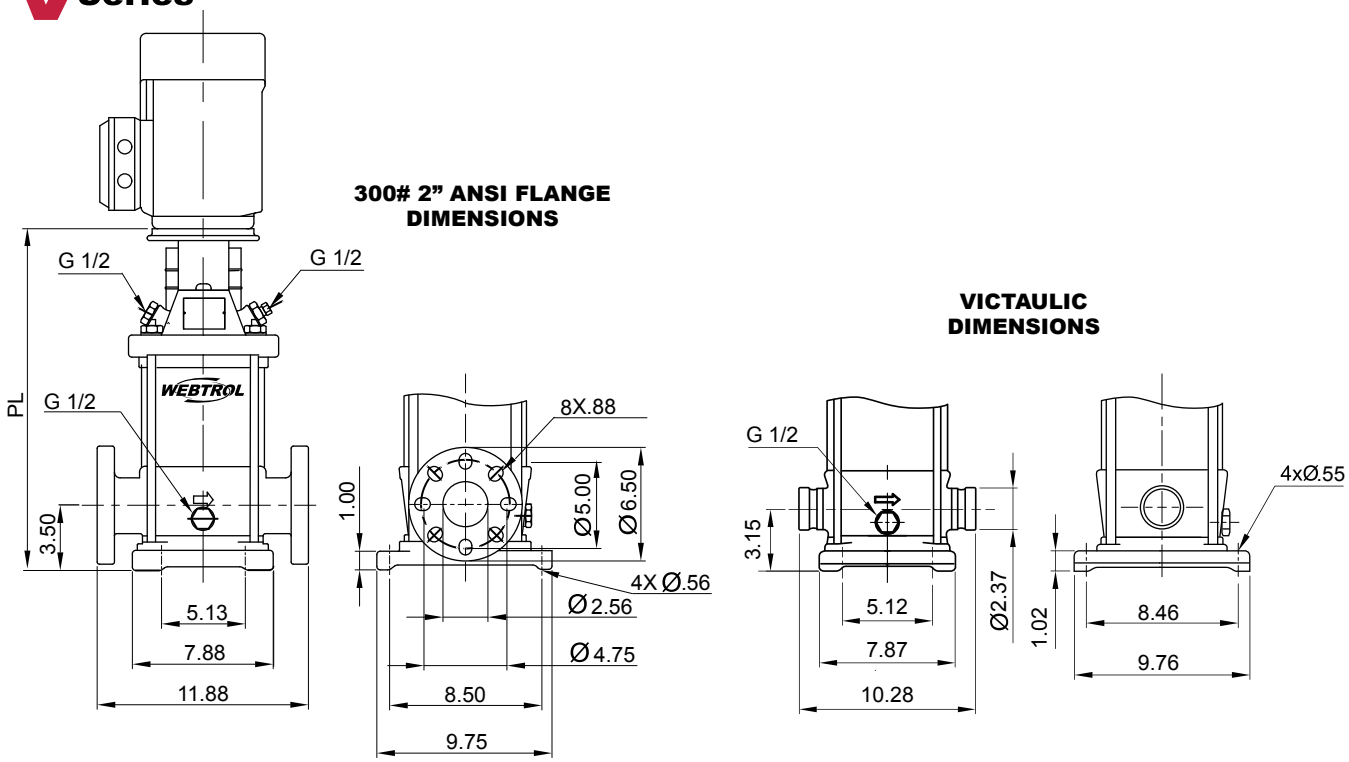

NOTES: All dimensions are in inches unless otherwise noted. Please contact factory for specific motor manufacturer dimensions.

Model	HP	Motor Frame	Pump Length (PL) - in. Flange	Pump Length (PL) - in. Victaulic	Pump End Weight - lbs. Flange	Pump End Weight - lbs. Victaulic
NV85B1	3	182TC	17.19	16.79	89	87
NV85B2	5	182TC	17.20	16.81	92	90
NV85B3	7.5	213TC	19.52	19.13	102	100
NV85B4	10	213TC	21.30	20.90	105	103
NV85B5	15	254TC	25.69	25.30	118	116
NV85B6	15	254TC	27.46	27.07	121	119
NV85B7	20	254TC	29.24	28.84	124	122
NV85B8	20	254TC	31.01	30.61	127	125
NV85B10	25	284TSC	33.80	33.41	135	133

NV85 SERIES GROUP CURVES

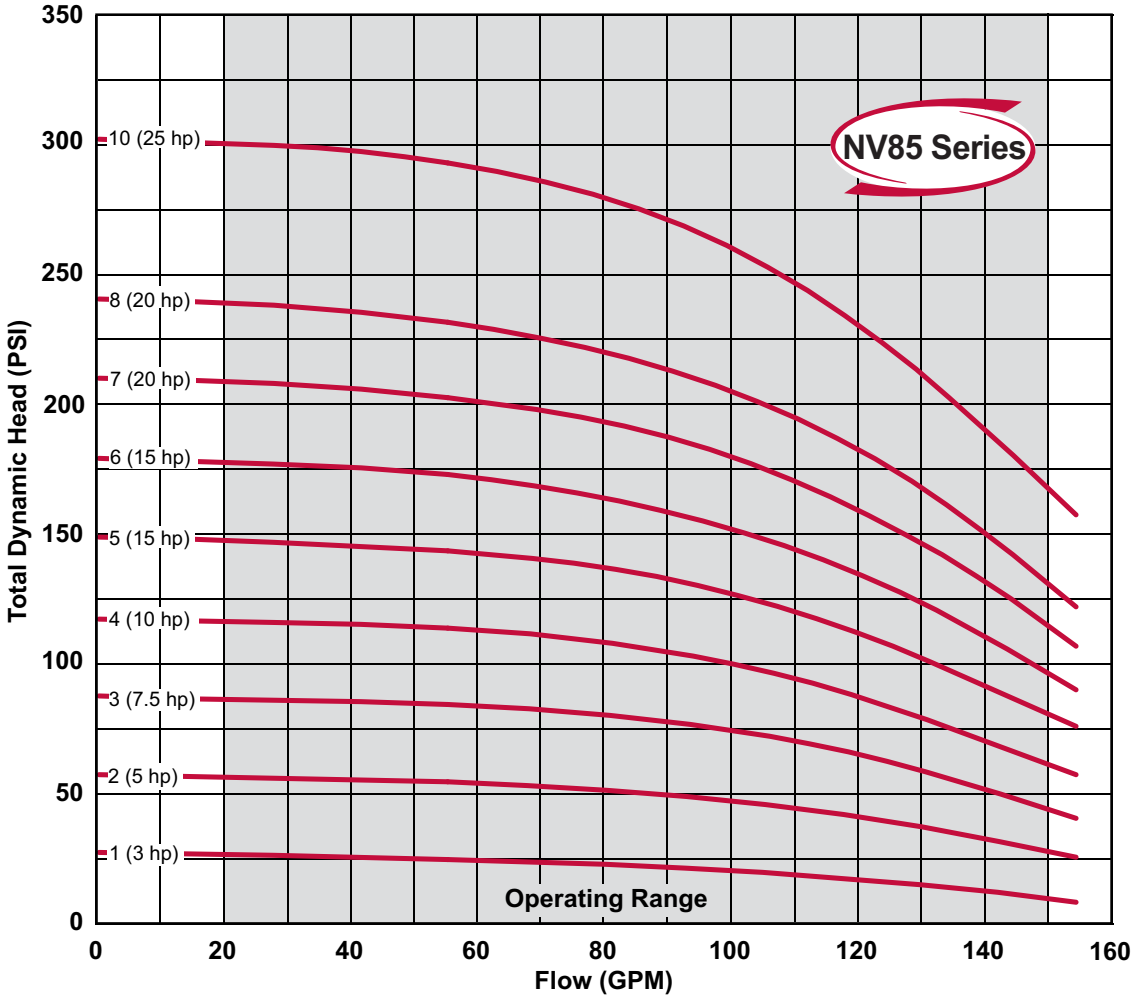

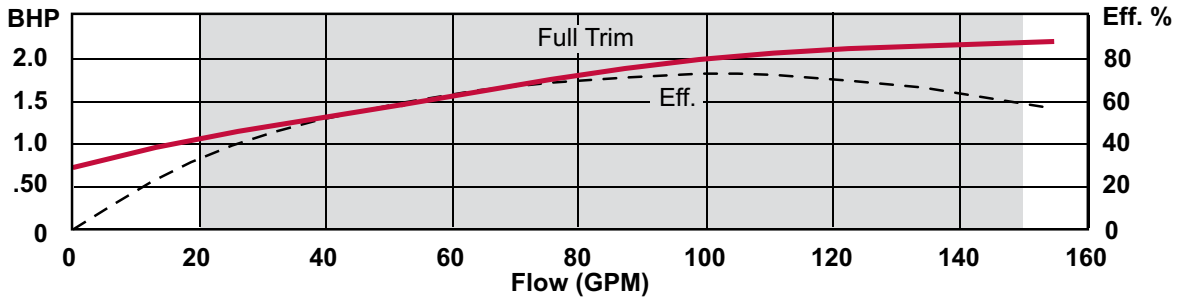

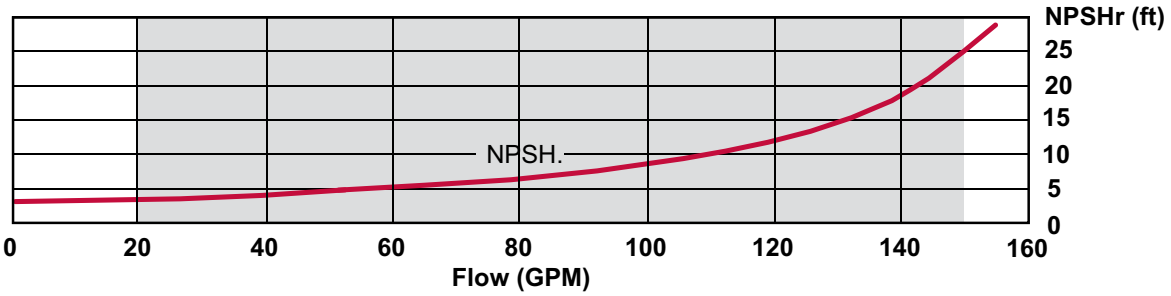

NV Series

NV120 PUMP DIMENSIONS

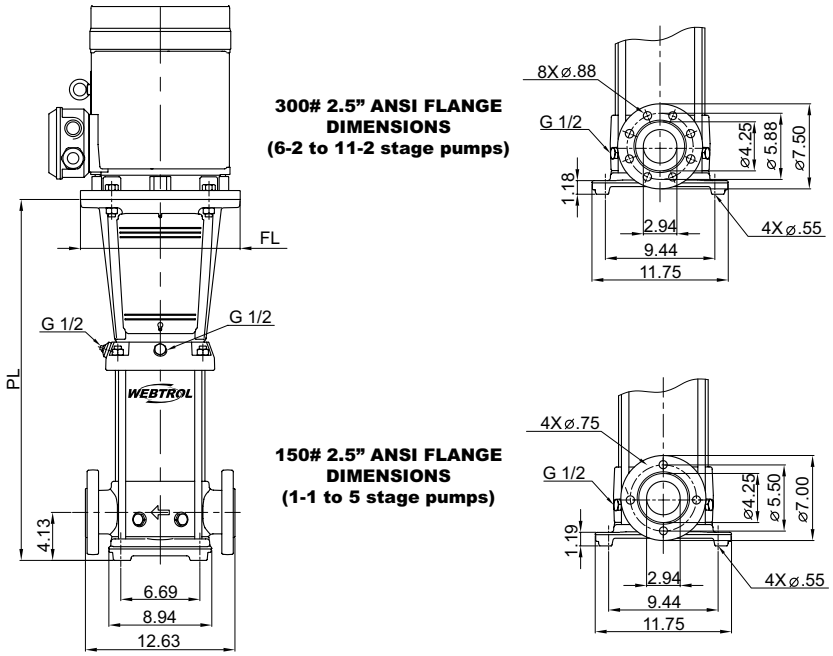

NOTES: All dimensions are in inches unless otherwise noted. Please contact factory for specific motor manufacturer dimensions

Model	HP	Motor Frame	Pump Length (PL) - in. Flange	Pump End Weight - lbs.
NV120B1-1	3	182TC	20.02	110
NV120B1	5	182TC	20.02	110
NV120B2-2	7.5	213TC	22.78	117
NV120B2-1	7.5	213TC	22.78	117
NV120B2	7.5	213TC	22.78	117
NV120B3-2	10	213TC	25.53	124
NV120B3	15	254TC	29.67	145
NV120B4-2	15	254TC	32.42	151
NV120B4	15	254TC	32.42	151
NV120B5-2	20	254TC	35.18	158
NV120B5	20	254TC	35.18	158
NV120B6-2	25	284TSC	37.93	167
NV120B6	25	284TSC	37.93	167
NV120B7-2	30	286TSC	40.69	174
NV120B7	30	286TSC	40.69	174
NV120B8-2	30	286TSC	43.44	181
NV120B8	40	286TSC	43.44	181
NV120B9-2	40	286TSC	46.20	186
NV120B9	40	286TSC	46.20	187
NV120B10-2	40	286TSC	48.96	192
NV120B10	40	286TSC	48.96	192
NV120B11-2	40	286TSC	51.71	198

NV120 SERIES GROUP CURVES

NV Series

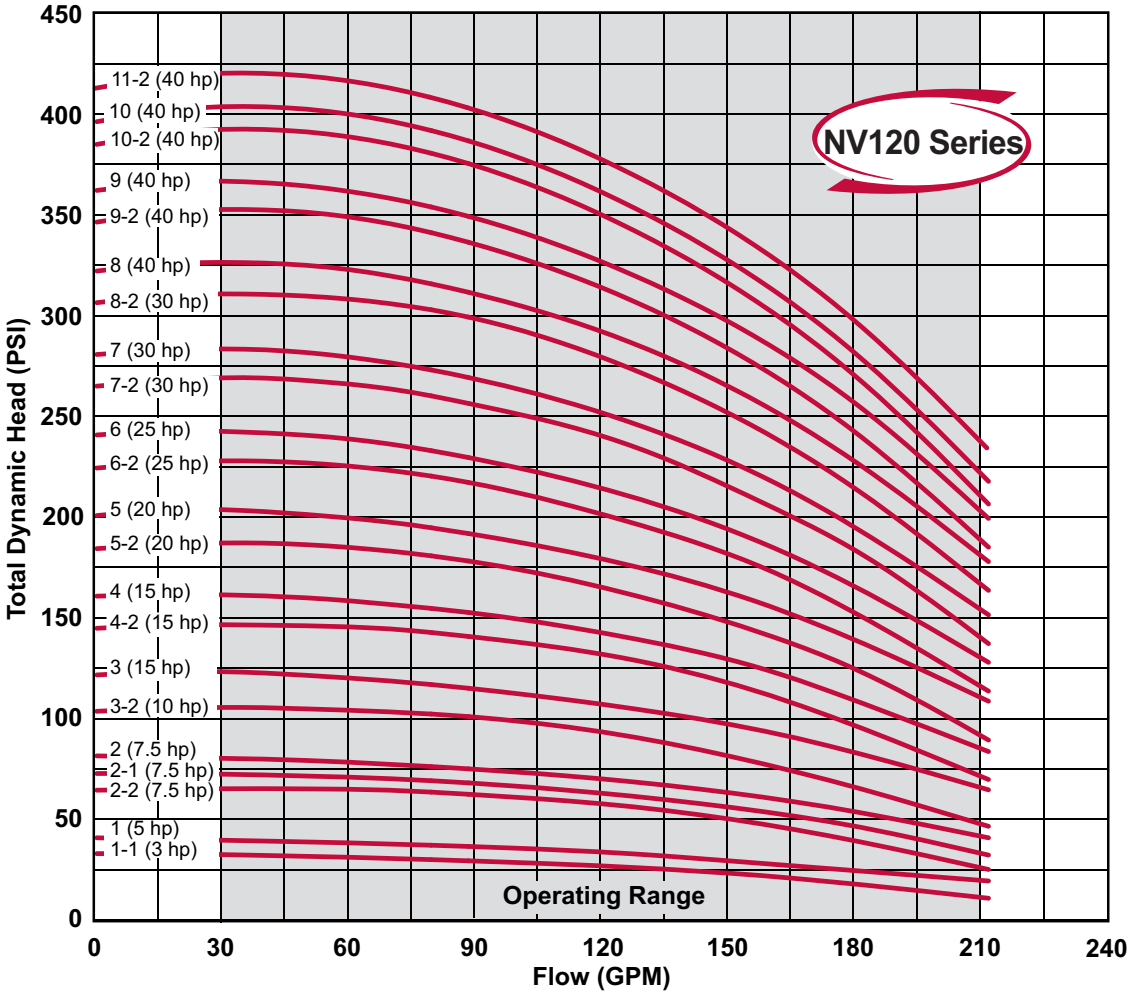

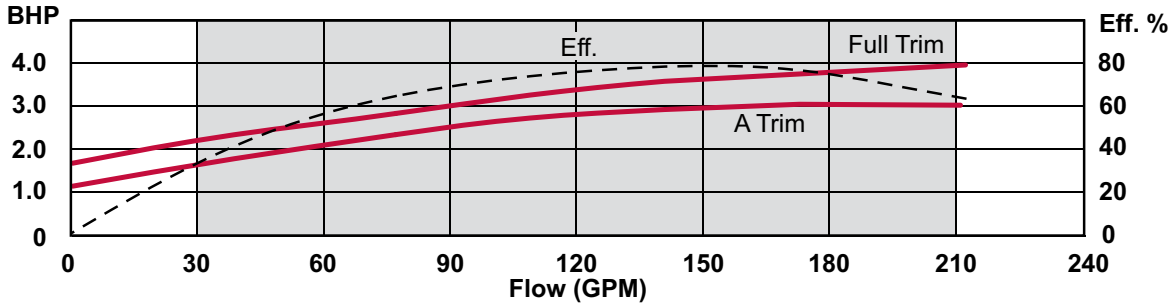

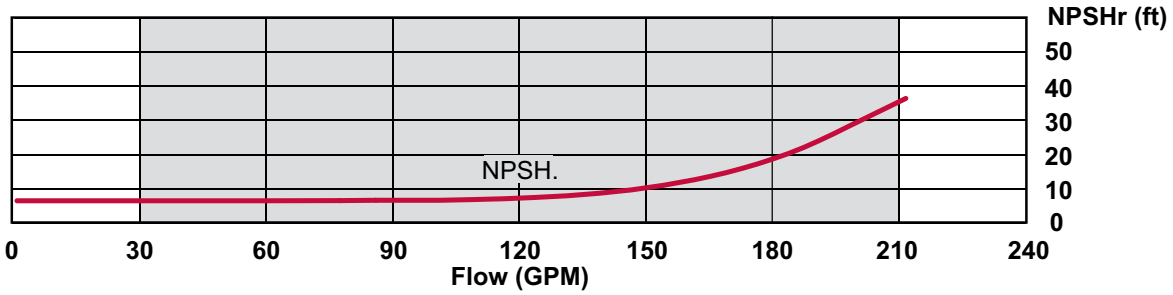

NV Series

NV180 PUMP DIMENSIONS

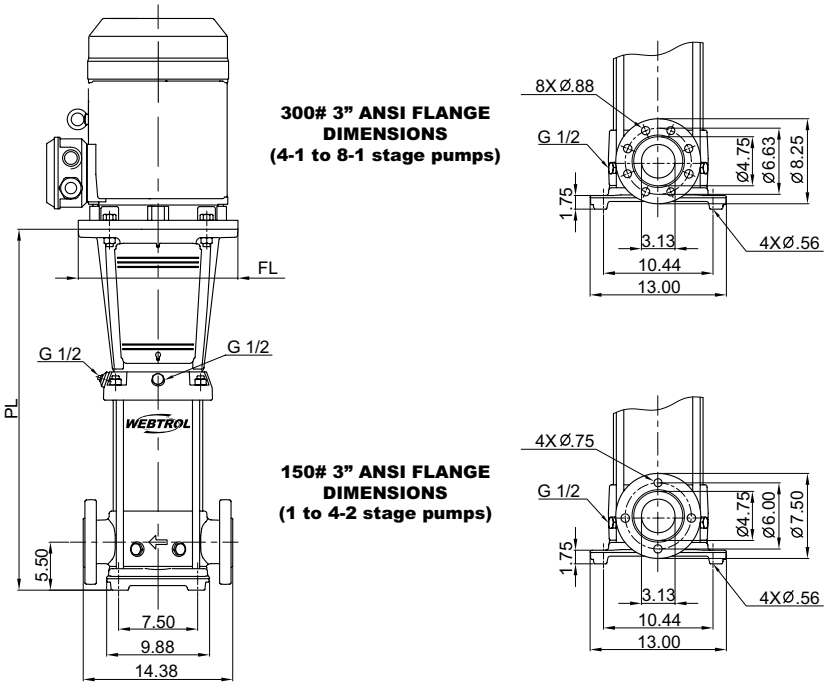

NOTES: All dimensions are in inches unless otherwise noted. Please contact factory for specific motor manufacturer dimensions

Model	HP	Motor Frame	Pump Length (PL) - in. Flange	Pump End Weight - lbs.
NV180B1-1	7.5	213TC	22.20	125
NV180B1	7.5	213TC	22.20	125
NV180B2-2	15	254TC	29.49	154
NV180B2-1	15	254TC	29.49	154
NV180B2	15	254TC	29.49	154
NV180B3-2	20	254TC	32.64	162
NV180B3-1	25	284TSC	32.64	165
NV180B3	25	284TSC	32.64	165
NV180B4-2	30	286TSC	35.79	173
NV180B4-1	30	286TSC	35.79	173
NV180B4	30	286TSC	35.79	173
NV180B5-2	40	286TSC	38.94	181
NV180B5-1	40	286TSC	38.94	181
NV180B5	40	286TSC	38.94	181
NV180B6-2	50	326TSC	42.09	206
NV180B6-1	50	326TSC	42.09	206
NV180B6	50	326TSC	42.09	206
NV180B7-2	50	326TSC	45.24	214
NV180B7-1	60	364TSC	45.24	214
NV180B7	60	364TSC	45.24	214
NV180B8-1	60	364TSC	48.39	221

NV180 SERIES GROUP CURVES

NV Series

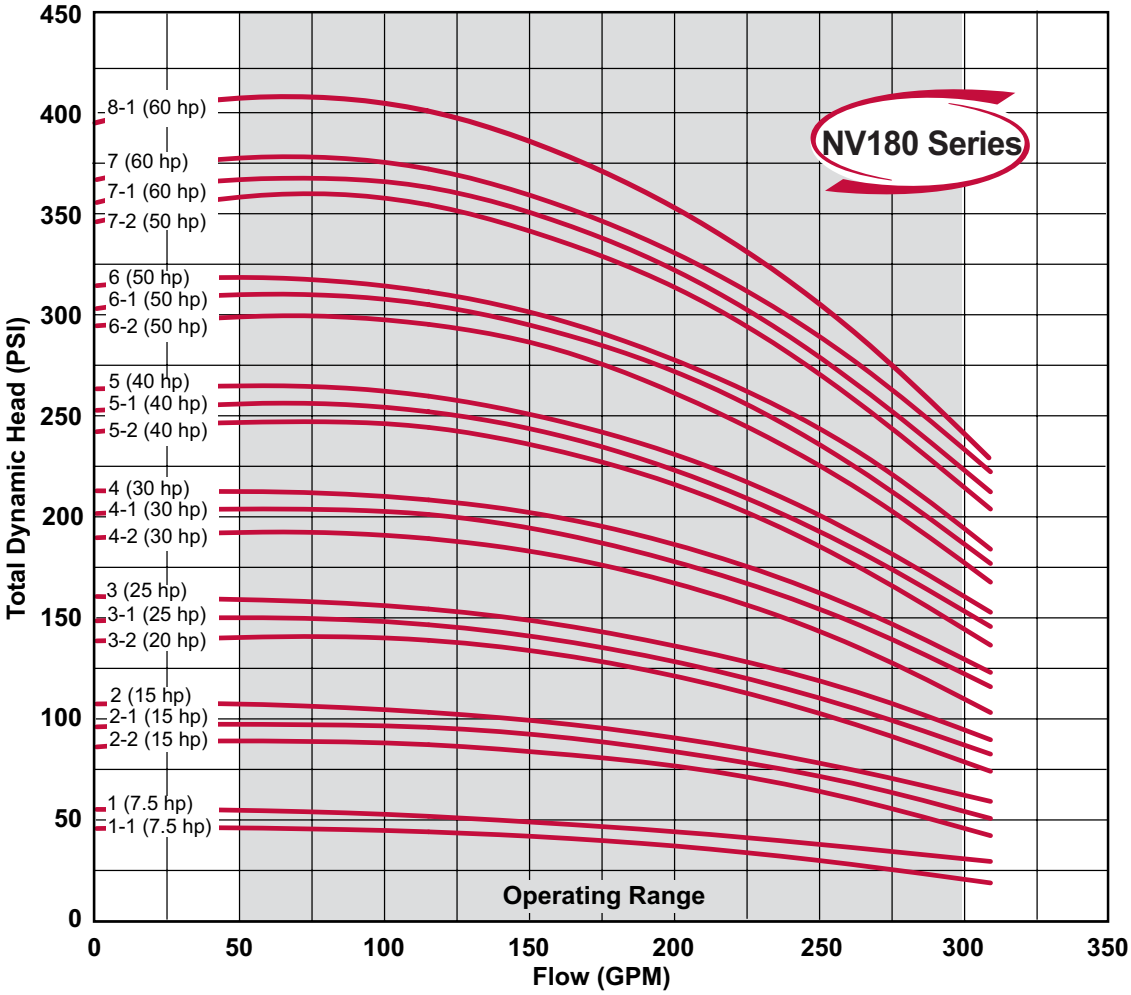

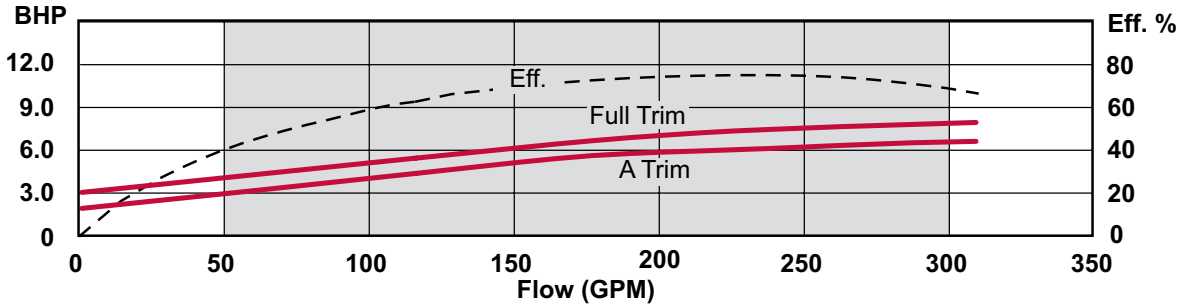

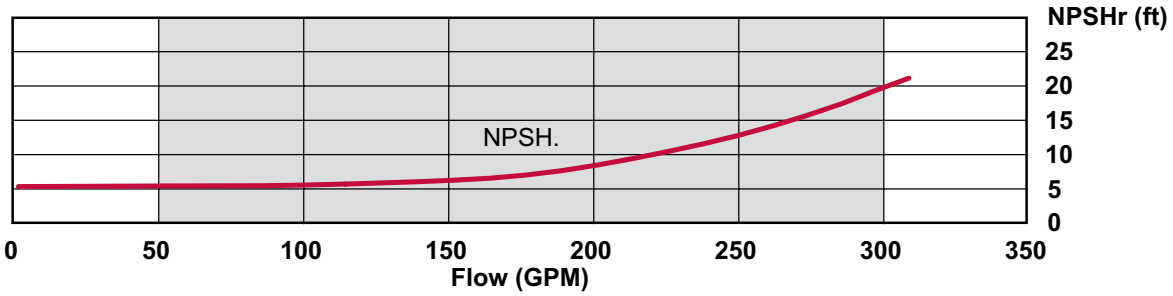

NV Series

NV280 PUMP DIMENSIONS

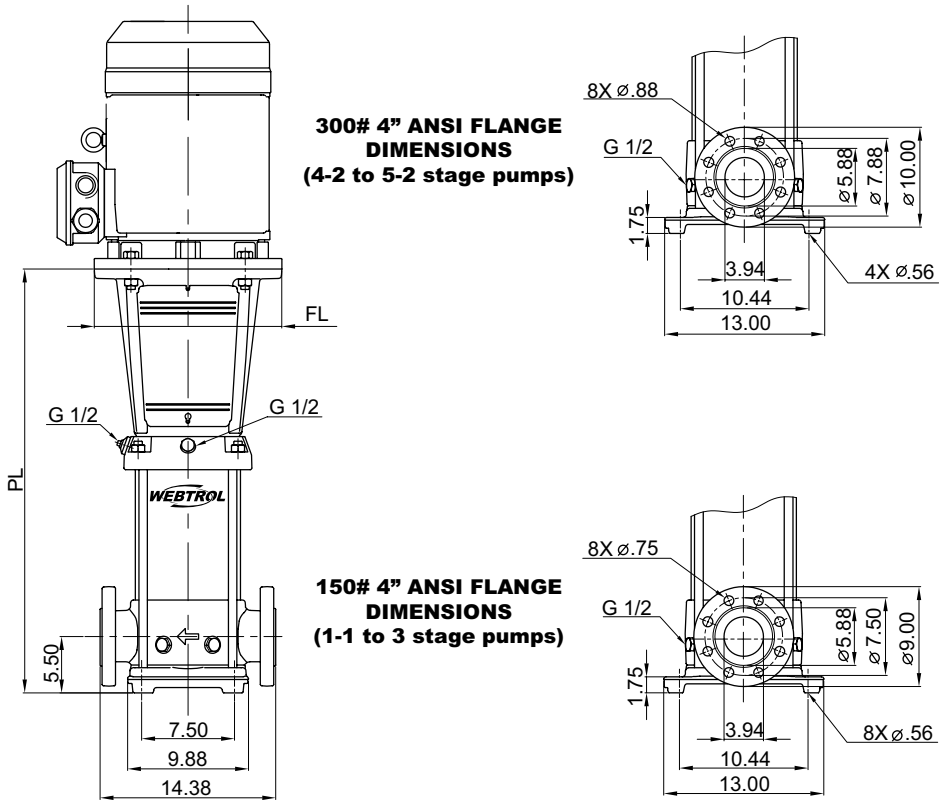

NOTES: All dimensions are in inches unless otherwise noted. Please contact factory for specific motor manufacturer dimensions

Model	HP	Motor Frame	Pump Length (PL) - in. Flange	Pump End Weight - lbs.
NV280B1-1	7.5	213TC	22.36	116
NV280B1	15	254TC	26.50	137
NV280B2-2	15	254TC	29.74	145
NV280B2-1	20	254TC	29.74	145
NV280B2	25	284TSC	29.74	148
NV280B3-2	30	286TSC	32.99	156
NV280B3-1	40	286TSC	32.99	156
NV280B3	40	286TSC	32.99	156
NV280B4-2	40	286TSC	36.24	164
NV280B4-1	50	326TSC	36.24	182
NV280B4	50	326TSC	36.24	182
NV280B5-2	60	364TSC	39.49	182

NV280 SERIES GROUP CURVES

NV Series

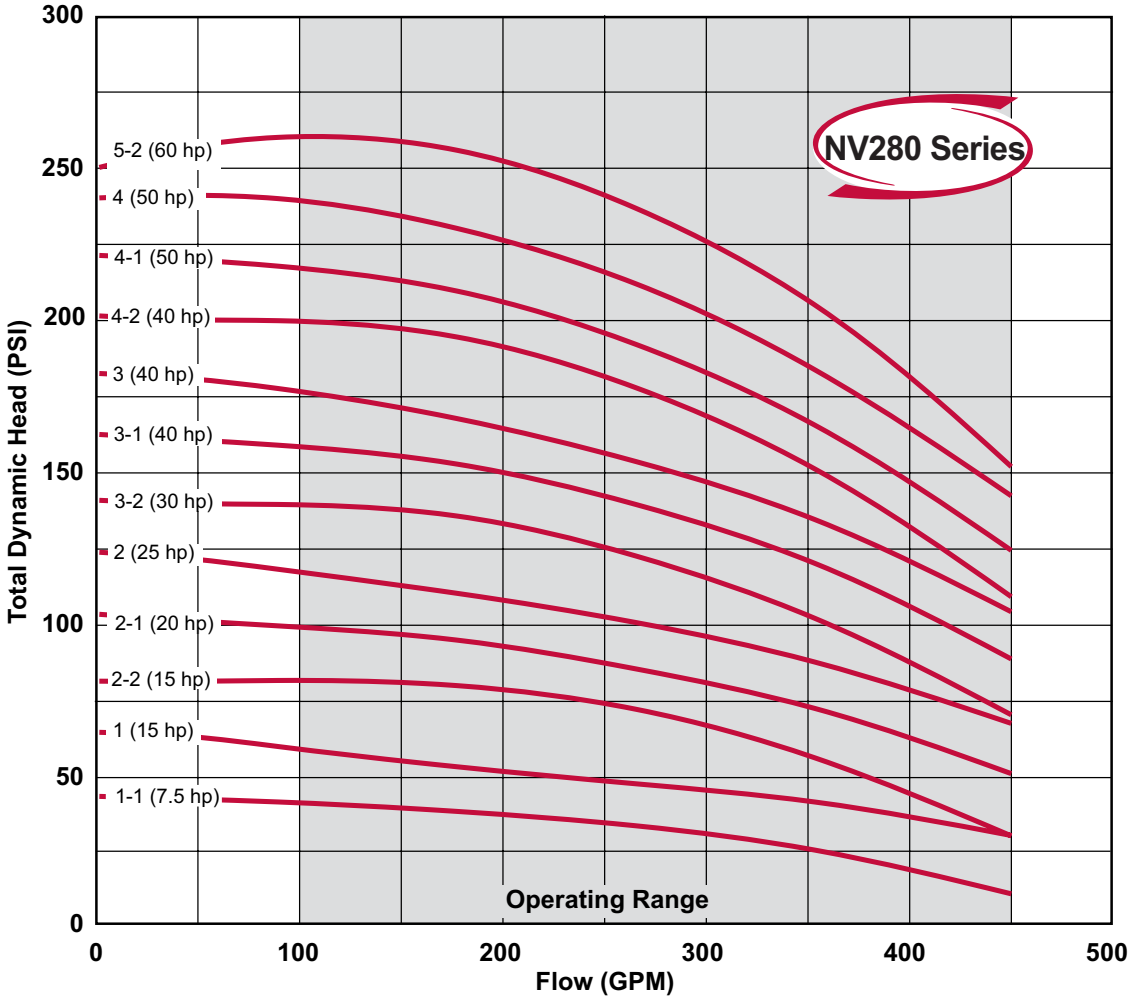

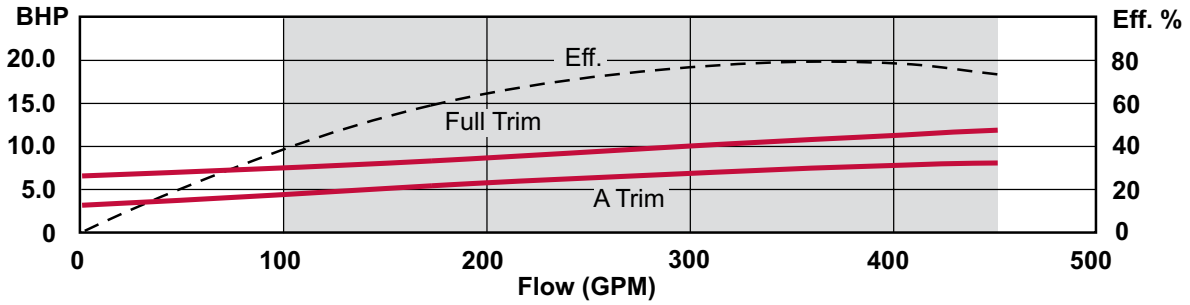

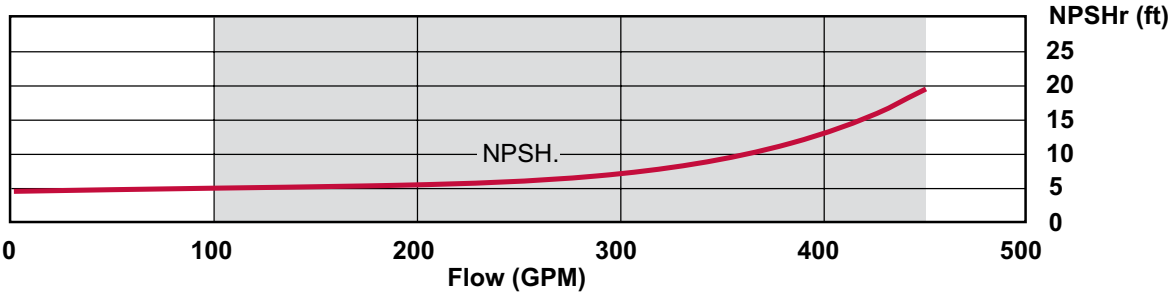

NV Series

NV400 PUMP DIMENSIONS

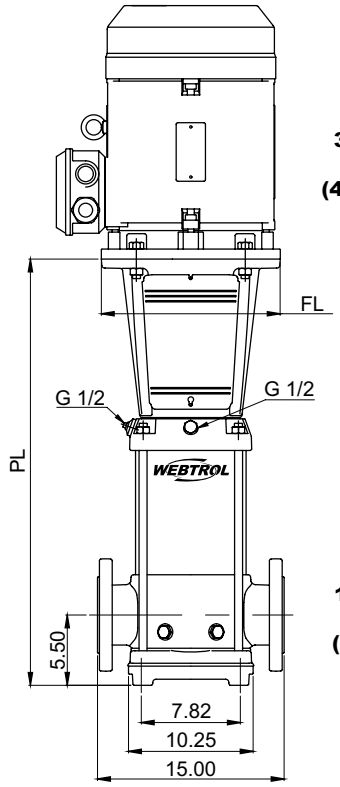

300# 4" ANSI FLANGE DIMENSIONS (4-2 to 4-1 stage pumps)

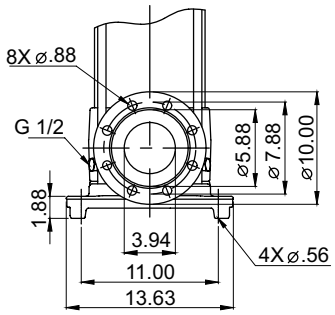

150# 4" ANSI FLANGE DIMENSIONS (1-1 to 3 stage pumps)

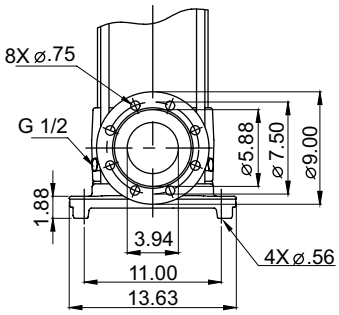

NOTES: All dimensions are in inches unless otherwise noted. Please contact factory for specific motor manufacturer dimensions

Model	HP	Motor Frame	Pump Length (PL) -in. Flange	Pump End Weight - lbs.
NV400B1-1	15	254TC	26.75	160
NV400B1	15	254TC	26.75	160
NV400B2-2	25	284TSC	30.34	173
NV400B2-1	30	286TSC	30.34	173
NV400B2	40	286TSC	30.34	173
NV400B3-2	40	286TSC	33.93	184
NV400B3-1	50	326TSC	33.93	202
NV400B3	50	326TSC	33.93	202
NV400B4-2	60	364TSC	37.36	217
NV400B4-1	60	364TSC	37.36	217

NV400 SERIES GROUP CURVES

NV Series

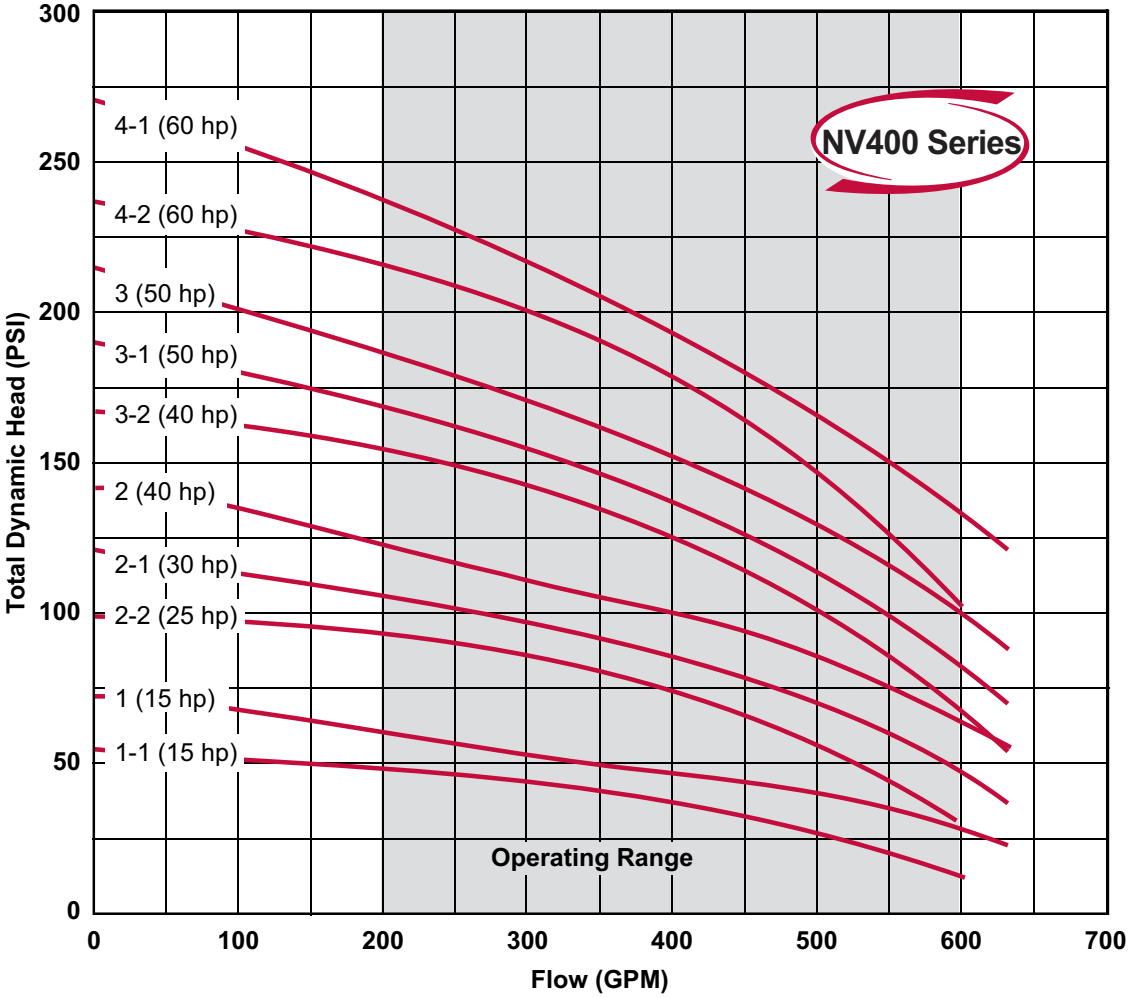

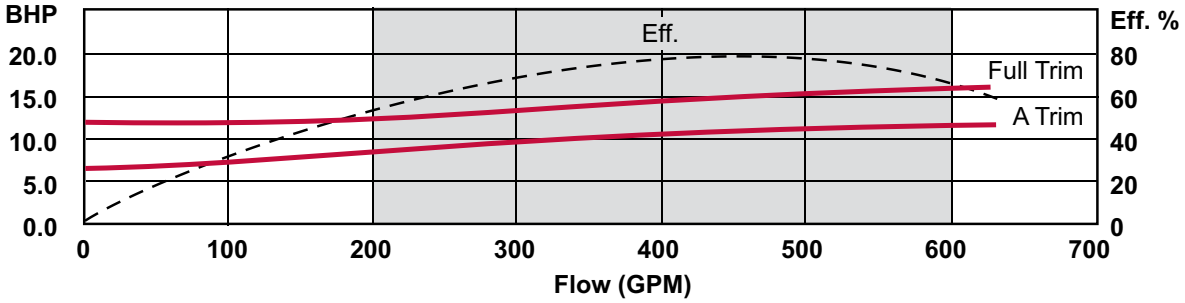

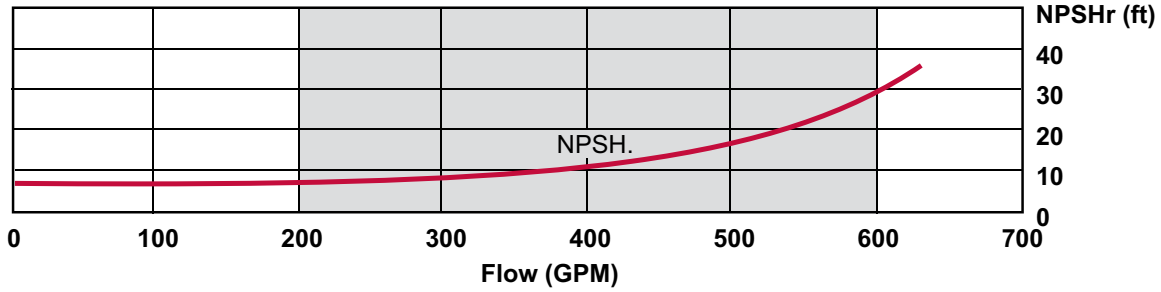

NOTES